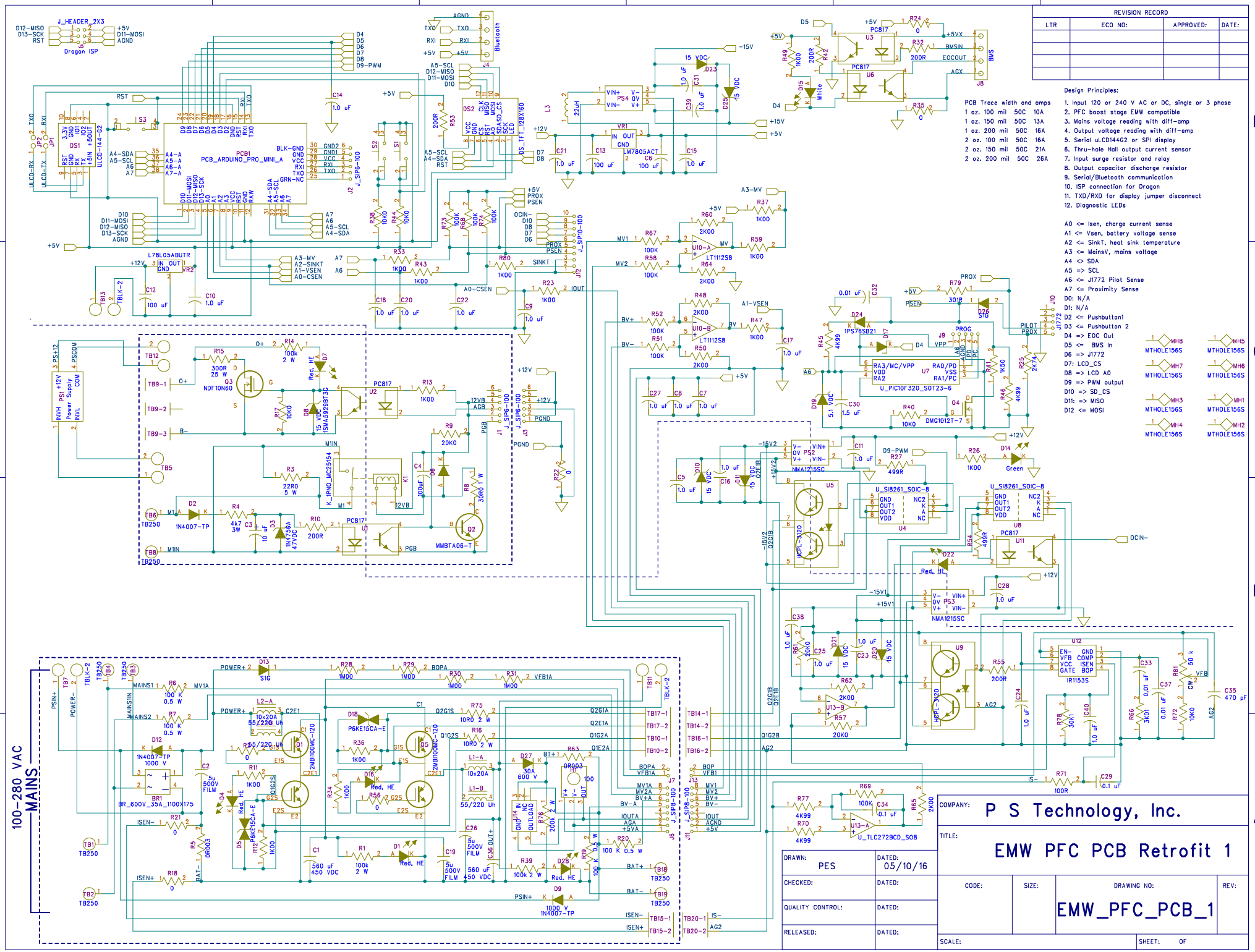
REVISION RECORD
LTR
ECO NO:
APPROVED:
DATE:
Design Principles:
1. Input 120 or 240 V AC or DC, single or 3 phase
2. PFC boost stage EMW compatible
3. Mains voltage reading with diff-amp
4. Output voltage reading with diff-amp
5. Serial uLCD144G2 or SPI display
6. Thru-hole Hall output current sensor
7. Input surge resistor and relay
8. Output capacitor discharge resistor
9. Serial/Bluetooth communication
10. ISP connection for Dragon
11. TXD/RXD for display jumper disconnect
12. Diagnostic LEDs
A0 <= Isen, charge current sense
A1 <= Vsen, battery voltage sense
A2 <= SinkT, heat sink temperature
A3 <= MainsV, mains voltage
A4 <> SDA
A5 => SCL
A6 <= J1772 Pilot Sense
A7 <= Proximity Sense
D0: N/A
D1: N/A
D2 <= Pushbutton1
D3 <= Pushbutton 2
D4 => EOC Out
D5 <= BMS In
D6 => J1772
D7: LCD_CS
D8 => LCD A0
D9 => PWM output
D10 => SD_CS
D11: => MISO
D12 <= MOSI
PCB Trace width and amps
1 oz. 100 mil 50C 10A
1 oz. 150 mil 50C 13A
1 oz. 200 mil 50C 16A
2 oz. 100 mil 50C 16A
2 oz. 150 mil 50C 21A
2 oz. 200 mil 50C 26A
100-280 VAC MAINS
COMPANY: P S Technology, Inc.
TITLE: EMW PFC PCB Retrofit 1
DRAWN: PES
DATED: 05/10/16
CHECKED:
QUALITY CONTROL:
RELEASED:
CODE:
SIZE:
DRAWING NO: EMW_PFC_PCB_1
REV:
SCALE:
SHEET: OF